315-HC FOOTPRINT AND MOUNTING INFORMATION

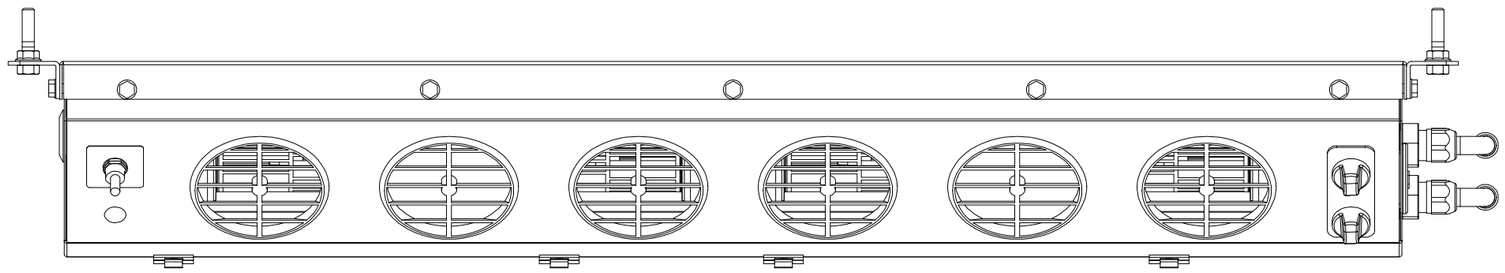

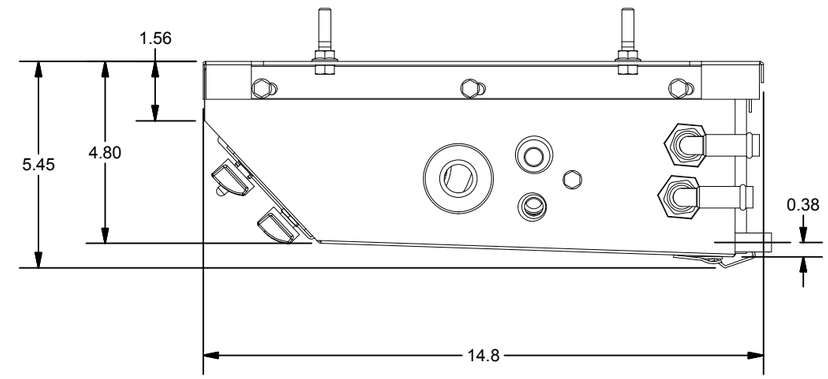

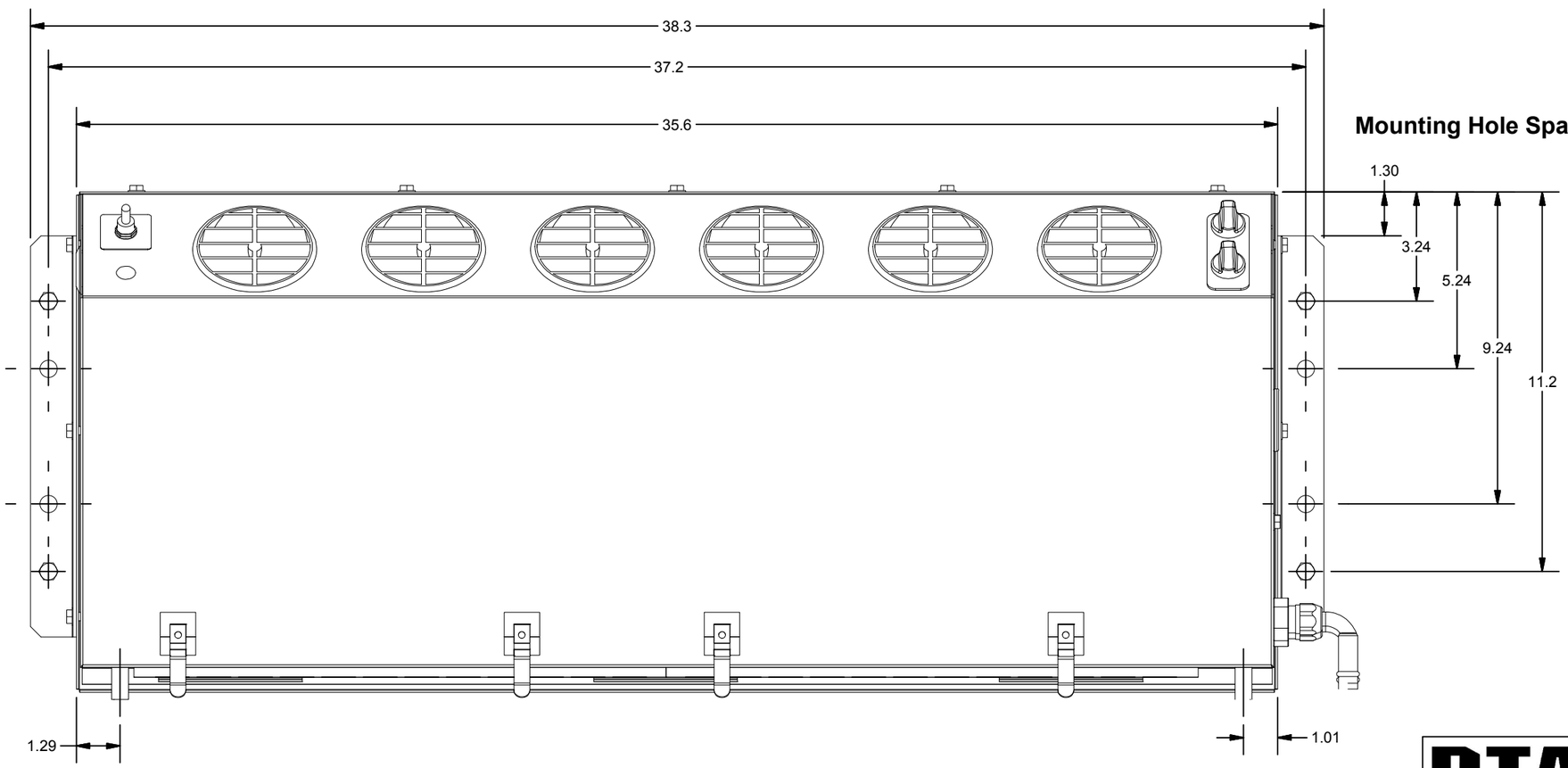

Mounting Hole Spacing

Mounting Specifications	
Quantity	Description
4	5/16-18x1-1/2 HEX CAP
4	5/16 WHIZ NUT
8	1/2" DIA HOLE- NO THREADS

DTAC®		DTAC- HEAVY EQUIPMENT HEAT/COOL SYSTEMS
		TITLE 315-HC FOOTPRINT AND MOUNTING INFORMATION
MODELED JSHAW		DWG NAME 315-HC Drawings.idw
DRAWN jhamaker	8/4/2011	SIZE B NOTE: ALL UNITS IN INCHES

315-HC FEATURE SPECIFICATIONS

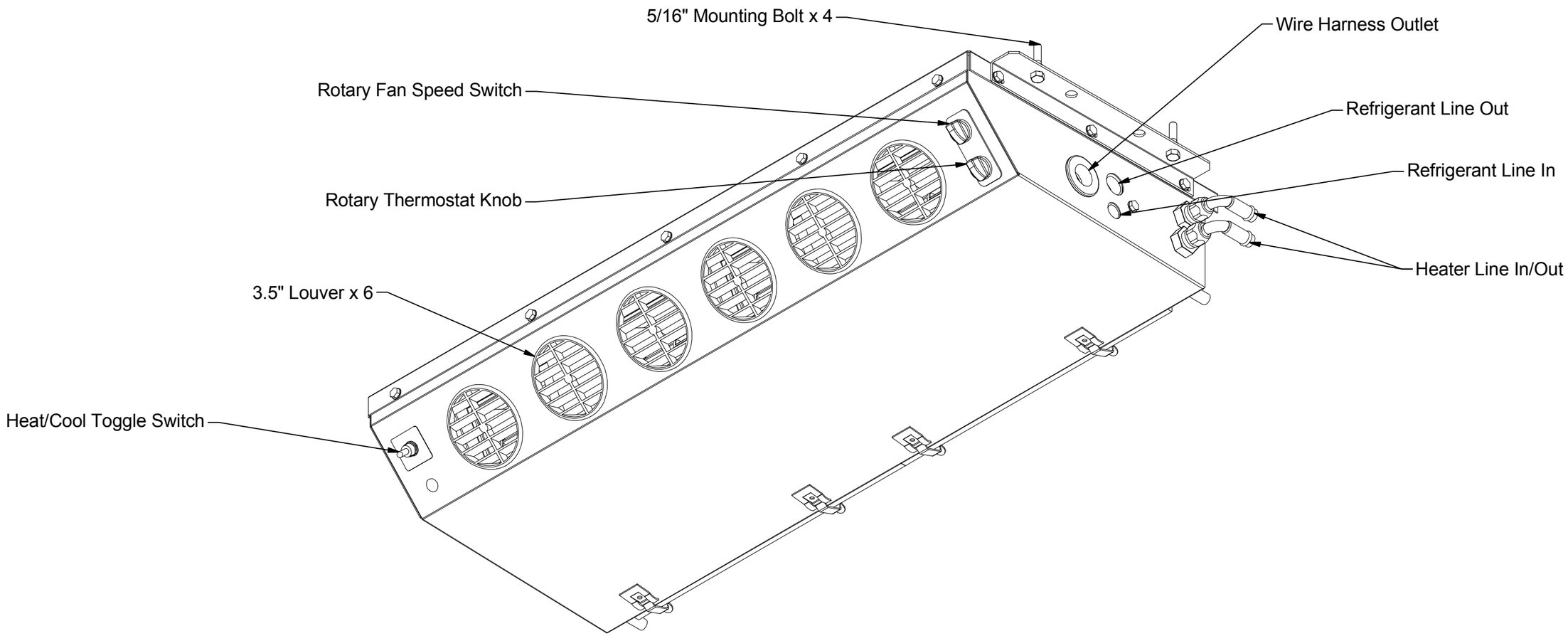

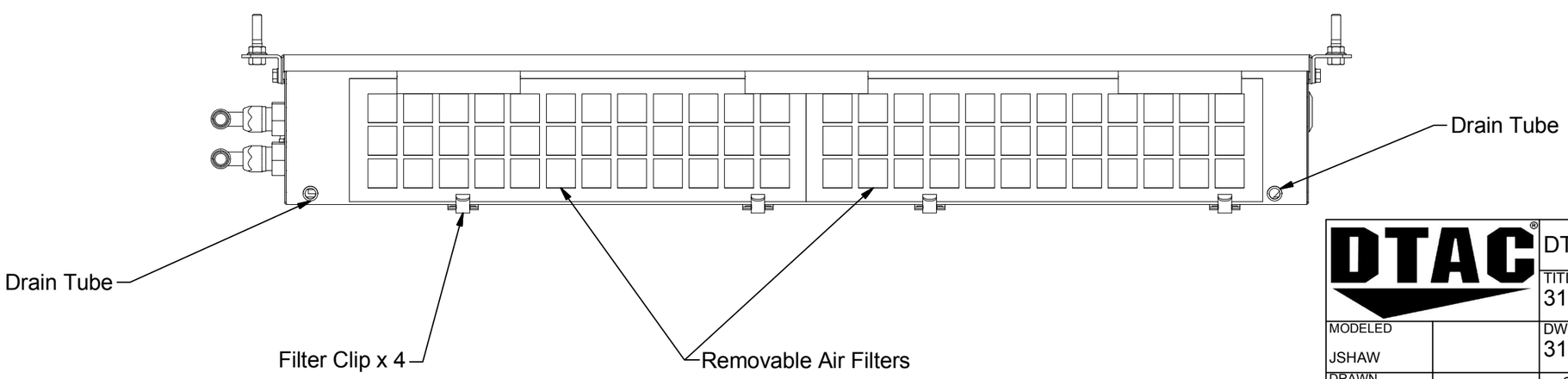

DTAC®		DTAC- HEAVY EQUIPMENT HEAT/COOL SYSTEMS
		TITLE 315-HC FEATURE SPECIFICATIONS
MODELED JSHAW		DWG NAME 315-HC Drawings.idw
DRAWN jhamaker	8/4/2011	SIZE B NOTE: ALL UNITS IN INCHES SHEET 2 OF 4

315-HC PARTS BREAKDOWN AND UNIT SPECIFICATIONS

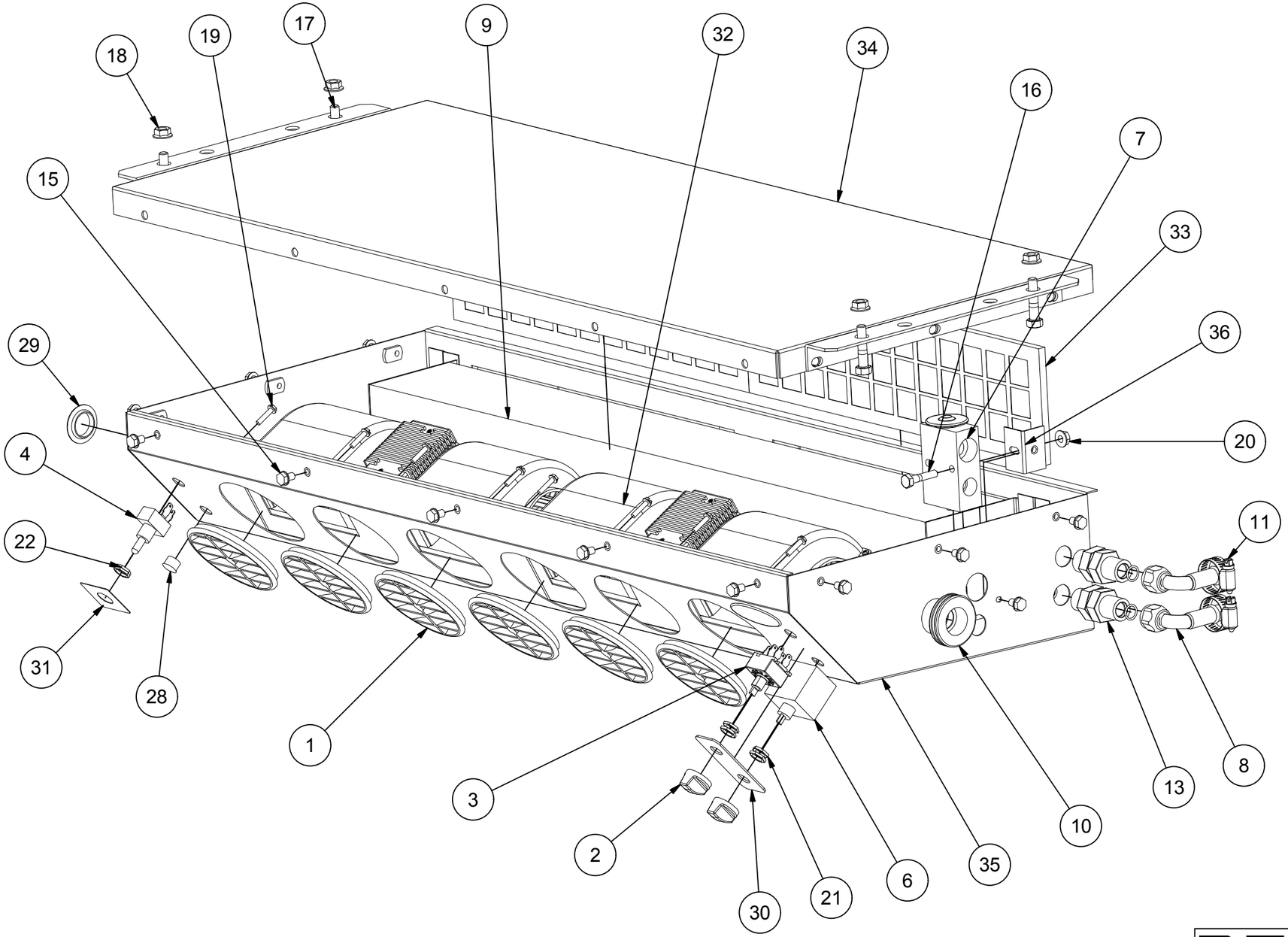

Parts Breakdown				
ITEM	QTY	DTAC NO.	DESCRIPTION	NOTE
1	6	02-16061	3-1/2" Louver	
2	2	03-00165	Knob	
3	1	03-13006	Rotary 3-Speed Switch	
4	1	03-13020	Toggle Switch	
5	1	03-13029	40 Amp Circuit Breaker	1
6	1	03-14002	Rotary Thermostat	
7	1	04-15004	Block Expansion Valve	
8	2	05-00301	90 Degree Heater Fitting	
9	1	07-00315	Heat\Cool Evap Coil	
10	1	09-00621	One Inch Grommet	
11	2	09-04000	Hose Clamp #6/#8	
12	6	09-04012	#8 O-Ring	
13	2	09-50004	#8 MIO Bulkhead w Jam Nut	
14	15 ft	10-20012	Drain Hose, 1/2"	1
15	12	12-00003	1/4-20 X 3/8 Bolt	
16	1	12-00021	1/4-20 x 1.25 Hex Bolt	
17	4	12-00023	5/16-18 - 1.5	
18	4	12-00054	Whz Nut 5/16-18	
19	9	12-00056	#8X3/4 Tap Screw	
20	1	12-00057	1/4-20 Whiz Nut	
21	4	12-00059	Standard Switch Nut	
22	2	12-00060	Heat/Cool Switch Nut	
23	1	12-00096	DTAC Label, Raised Oval	1
24	2	12-00123	Kazoo Drain Restrictor	1
25	1	12-00315	Wire Harness	1
26	1	12-01874	1/2" Plastic Drain Tee	1
27	2	12-01875	1/2" Plastic Drain Elbow	1
28	1	12-02643	1/2" Button Plug	
29	1	12-02783	1" Button Plug	
30	1	12-50419	Faceplate	
31	1	12-50420	Face Plate - Heat/Cool	
32	2	30-51580 or 30-51581	12V Blower Assembly or 24V Blower Assembly	
33	2	31-50000	Filter 315	
34	1	31-50001	Lid	
35	1	31-50002	Housing	
36	1	50-50500	Expansion Valve Mnt Brkt	
-	-	Note 1	Part not shown	

UNIT SPECIFICATIONS						
BTU'S COOL	BTU'S HEAT	AIR FLOW	WEIGHT	MOTOR	CURRENT DRAW	DTAC NO.
33,000	22,000	410 CFM	48 LBS	2-12V	24 AMPS @ 13.6 VDC	315-12HC
"	"	"	"	2-24V	14 AMPS @ 27 VDC	315-24HC

DTAC®

DTAC- HEAVY EQUIPMENT HEAT/COOL SYSTEMS

TITLE
315-HC PARTS BREAKDOWN AND UNIT SPECIFICATIONS

MODELED
JSHAW

DWG NAME
315-HC Drawings.idw

DRAWN
jhamaker

8/4/2011

SIZE
B

NOTE: ALL UNITS IN INCHES

315-HC Series - Heat/Cool
Wire Diagram

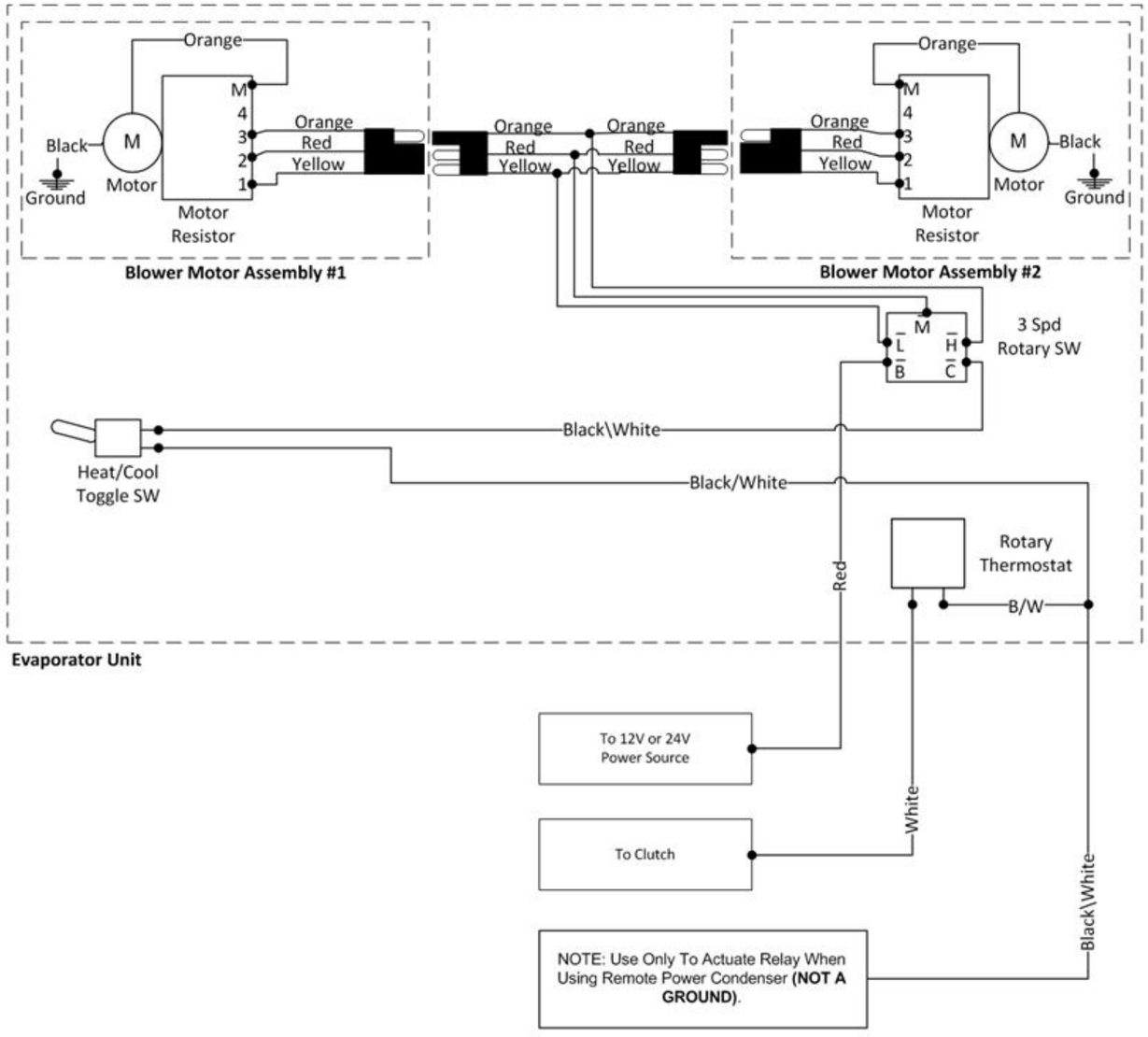

DTAC

Manufacturer of Heavy Equipment Heat/Cool Systems
5130 Edgefield Ln, TX 76065 USA
Phone 1-800-527-9477 Fax 1-800-299-5972
www.dtac.com

12-00315
07.16.10

SIZE
B